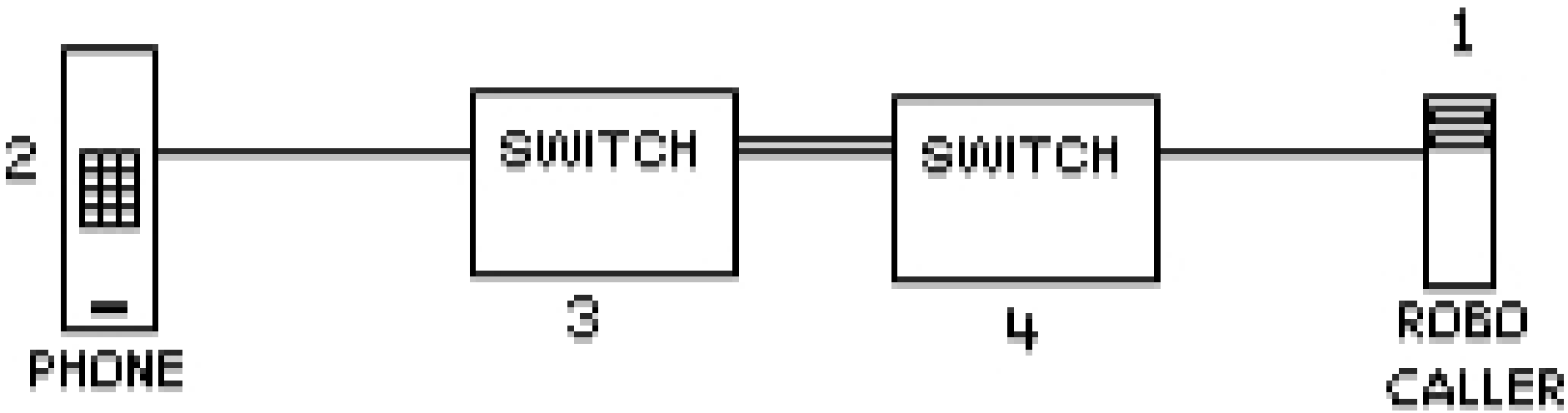
1
2
SWITCH
SWITCH
3
4
PHONE
ROBO
CALLER